PARTS LIST			
ITEM	QTY	PART NUMBER	DESCRIPTION
1	2	LinearRail-LWL7B-100mm	STEP AP214
2	1	New Hub	
3	1	Alu C 1x2x1x35	
4	2	Carriage-LWL7B	STEP AP214
5	2	Screw 8-32 Steel 2.500	
6	2	Nut 8-32 THIN Nylock	Nylock nuts have internal nylon lock.
7	2	Odom Shell	
8	2	Same_Sky_AMT102-0048-N2000-W	STEP AP214
9	2	60mm ASSM wit metal hub	
10	2		STEP AP203

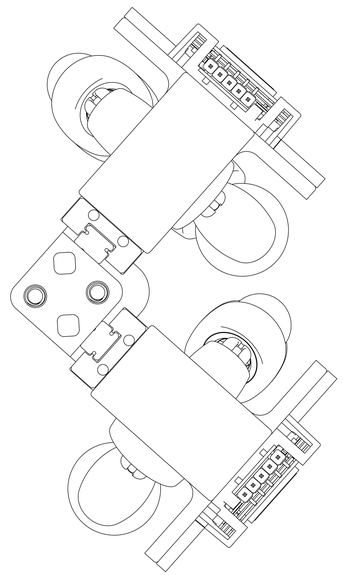

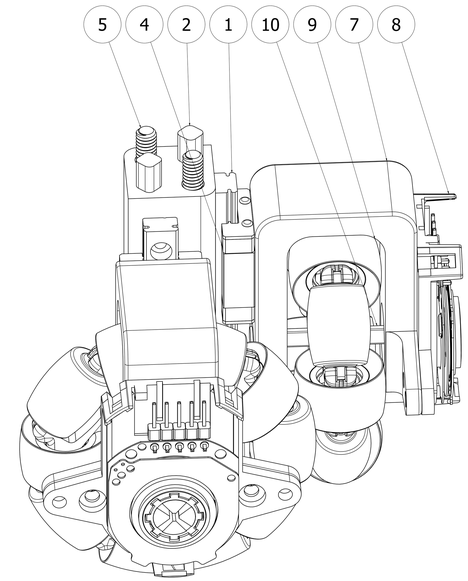

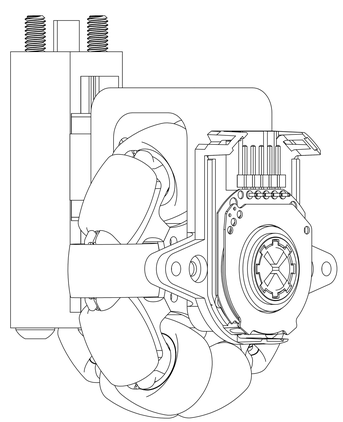

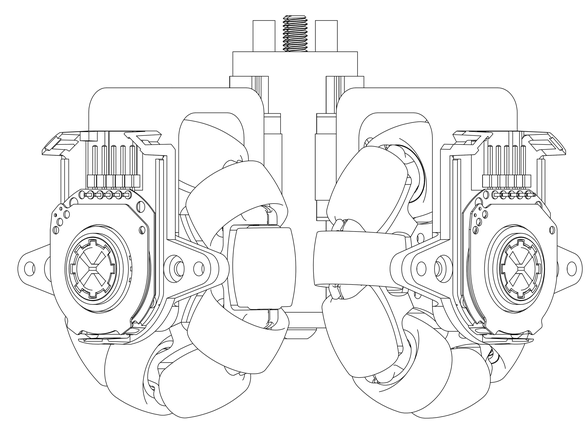

This drawing is the sole property of Arkansas Tech University. It is provided on the condition that it will not be used in any way that is harmful to the university's interests.
By accepting or using this drawing, you agree to this condition and acknowledge Arkansas Tech University's exclusive ownership.

TOLERANCES: UNLESS OTHERWISE SPECIFIED	
NO DECIMAL	X. ± 1
1 PLACE DECIMAL	X.X ± .03
2 PLACE DECIMAL	X.XX ± .01
3 PLACE DECIMAL	X.XXX ± .005
ANGLES	X° ± 15'

45 Odom Assembly

DRAWN: DATE:

CHECKED: SCALE:

SHEET: